1310M Grate

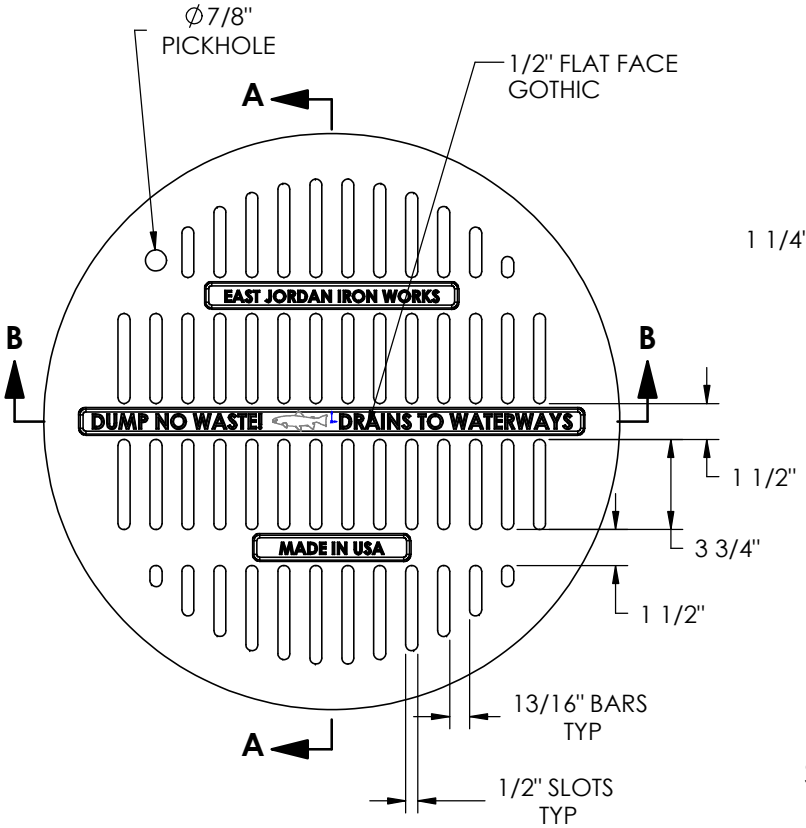

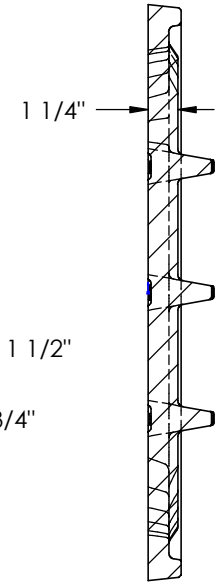

SECTION A-A

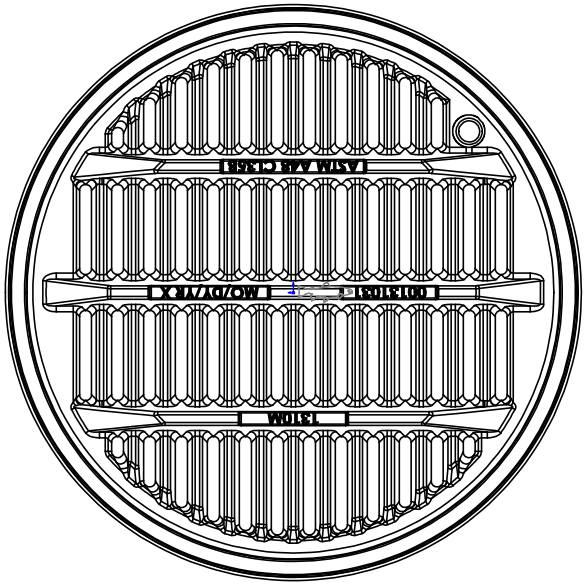

BOTTOM VIEW

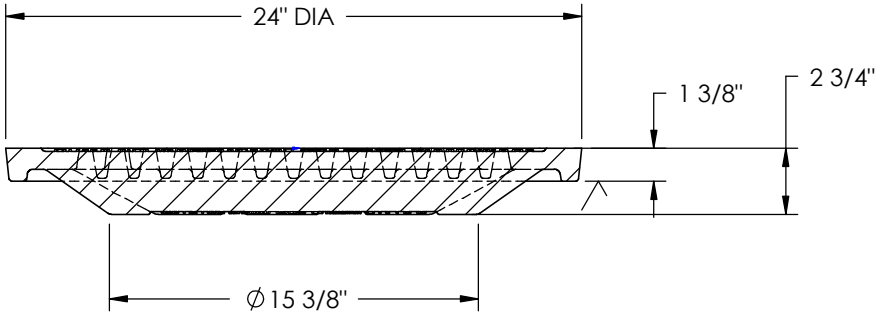

SECTION B-B

Product Number

00131031

Design Features

-Materials
  Gray Iron (CL35)
-Design Load
  Heavy Duty
-Open Area
  84 sq in
-Coating
  Undipped
-√ Designates Machined Surface

Certification

-ASTM A48
-
-
-Country of Origin: USA

Drawing Revision

10/17/2008 Designer: DEW
6/7/2012 Revised By: SDC

Disclaimer

Weights (lbs/kg), dimensions (inches/mm) and drawings provided for your guidance. We reserve the right to modify specifications without prior notice.

CONFIDENTIAL: This drawing is the property of EJ Group, Inc. and embodies confidential information, registered marks, patents, trade secret information, and/or know how that is the property of EJ Group, Inc. Copyright © 2012 EJ Group, Inc. All rights reserved.

Contact

800 626 4653
ejco.com